RBG SOLO



Low-concentration solid particle aerosols produced from powders are required for many research, development, and quality assurance applications and calibrating particle measurement devices. The RBG system disperses reliable non-cohesive powders such as mineral dusts, active pharmaceutical ingredients, pollen, etc., in the size range of < 200 μm and with a fine fraction of < 100 nm. Monolithic solid materials like blackboard chalk are finely dispersed with the highest dosing constancy.The unique advantage of this dosing and dispersion system is that in the RBG system, mass flows range from approx. 40 mg/h up to approx. 800 g/h are dispersed with the highest level of dosing constancy.

RBG solo has an integrated pump and can be operated independently of a compressed air supply.

OPERATION PRINCIPLE

PROVEN TECHNOLOGY UP TO DATE

The powder to be dispersed is filled little by little into the cylindrical solid material reservoir and compressed with a tamper. Lucerne University determined an excellent reproducibility of the tamping density in the solid material reservoir with a deviation of 3.4 %. The filled solid material reservoir is inserted into the dispersing head of the RBG. The powder, which has thus been uniformly compressed across the filling level, is then conveyed onto a rotating brush at a precisely controlled feed rate. An adjustable volume flow streams over the tightly woven precision brush at a very high speed and blows the particles out of the brush. The dispersing head assembly consists of a dispersing holder, dispersing cover, precision brush, and solid material reservoir.

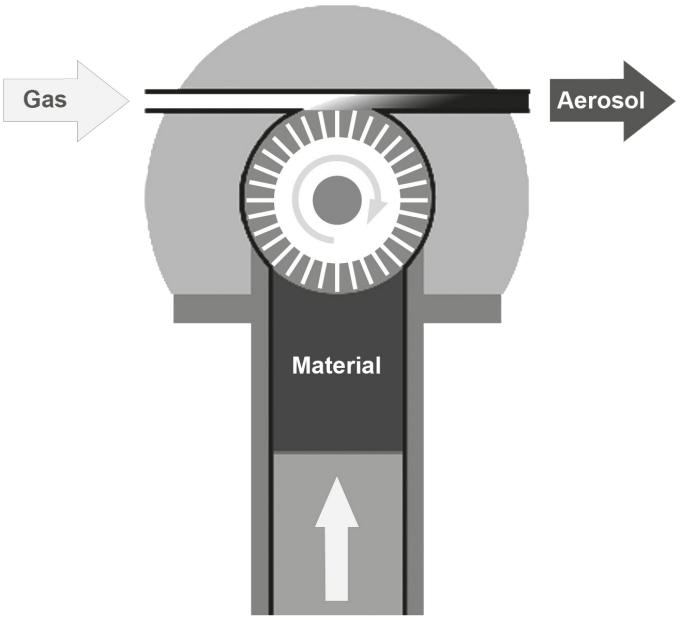

Fig. 1: Schematic diagram of RBG system

Dosing is performed via the precisely controlled feed rate of the feed piston. The desired mass flows can be quickly and reproducibly specified based on the cross-section of the solid material reservoir, the precisely adjustable feed rate of the feed piston, and the easy-to-determine tamping density of the powder in the reservoir.

Reservoir diameter	Fill quantity	Feed rate 1 mm/h	Feed rate10 mm/h	Feed rate 100 mm/h	Feed rate 1000 mm/h
7 mm	2.7 g	38 mg/h	380 mg/h	3.8 g/h	38 g/h
10 mm	5.5 g	78 mg/h	780 mg/h	7.8 g/h	78 g/h
14 mm	17 g	150 mg/h	1.5 g/h	15 g/h	150 g/h
16 mm	30 g	200 mg/h	2 g/h	20 g/h	200 g/h
20 mm	35 g	310 mg/h	3.1 g/h	31 g/h	310 g/h
32 mm	88 g	800 mg/h	8 g/h	80 g/h	800 g/h

Table 2: Mass flows of RBG basic / solo / professional (compacted density 1 g/cm³)

The powder separated from the reservoir by the precision brush is almost wholly dispersed into the constituent particles (see Fig. 2) in the dispersing head by air flowing at high speed. The dispersing air flow is regulated automatically by an integrated mass flow control.

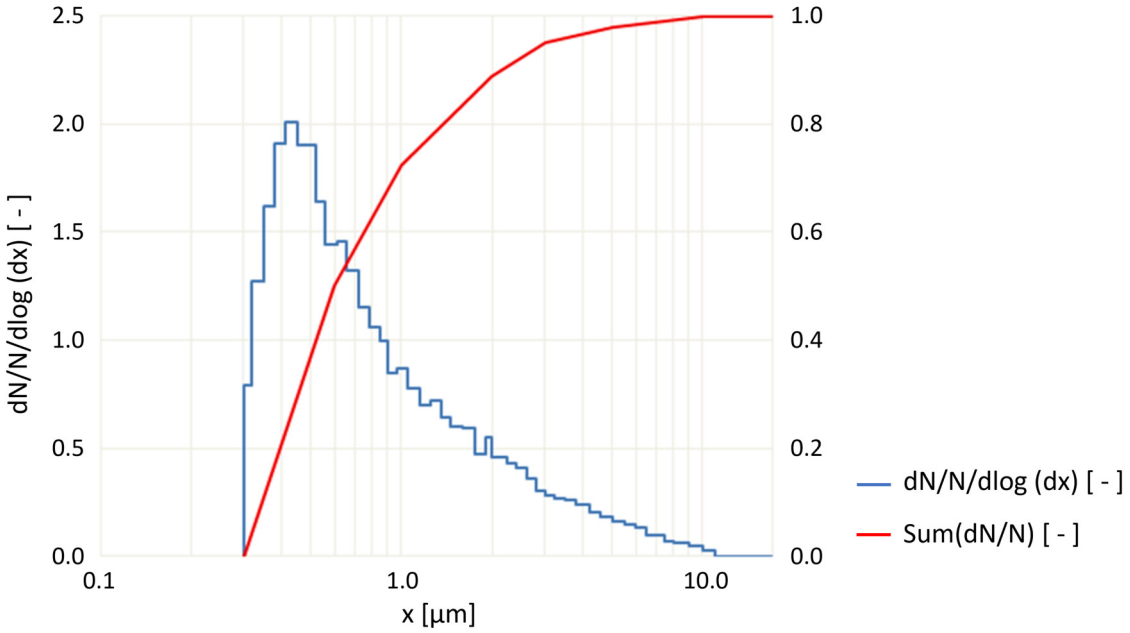

Fig. 2: Particle size distribution with the welas® digital 2000

Four different dispersing covers can be used for optimal dispersion.

Cover	Particle size	Reservoir diameter	Volume flow
A	< 0.1 – 200 µm	7 – 32 mm	33 – 80 l/min
B	< 0.1 – 200 µm	7, 10 and 14 mm	17 – 40 l/min
C	< 0.1 – 200 µm	7 mm	8 – 20 l/min
D	200 – 1,000 µm	7 – 32 mm	33 – 80 l/min

Table 4: Dispersion covers RBG system

The construction design of the RBG system allows for operation in ″powder″/″no powder″ pulse mode with cycle lengths ranging down to a second. The function can be used manually on the unit or via a connected computer.

RBG solo can be optionally controlled via the delivered software from a Windows computer or tablet.

Benefits

- Very high short-term and long-term dosing constancy
- Dispersion of virtually all non-cohesive dusts
- Easy and fast exchange of different solid material reservoirs and dispersing covers
- Integrated pump replaces compressed air supply
- Remote operation with included software
- Device easy to clean
- Little maintenance required
- Low operating expenses

DATASHEET

Particle size range	0.1 – 200 μm
Maximum particle number concentration	Approx.10^7 particles/cm³
Volume flow	8 – 40 Nl/min
Mass flow (particles)	0.04 – 800 g/h (with an assumed compacted density of 1 g/cm^3)
Filling height	110 mm
Filling quantity	2.7 g (reservoir Ø = 7 mm), 5.5 g (reservoir Ø = 10 mm), 17 g (reservoir Ø = 14 mm), 35 g (reservoir Ø = 20 mm), 88 g (reservoir Ø = 32 mm) (with an assumed compacted density of 1 g/cm^3)
Interfaces	USB type B
Power supply	115 – 230 V, 50/60 Hz
Particle material	Non-cohesive powders and bulks
Dosing time	Several hours nonstop
Carrier/dispersion gas	Air, nitrogen
Maximum counter pressure	0.1 barg
Compressed air connection	Quick coupling
Feed rate	1 – 1,000 mm/h
Reservoir inner diameter	7, 10, 14, 20, 32 mm
Aerosol outlet connection	Øinside= 5 mm, Øoutside = 8 mm
Dispersion lid	Type A, type B, type C, type D
Dimensions	515 • 330 • 240 mm (H • W • D)
Weight	Approx. 19 kg

Applications

- Filter industry:
  - Determination of fractional separation efficiency
  - Determination of total separation efficiency
  - Long-term dusting
  - Filter media and ready-made filters
  - Dust removal filters
  - Vacuum cleaners and vacuum cleaner filters
  - Car interior filters
  - Engine air filters
- Calibration of particle measurement devices
- Flow visualization
- Inhalation tests
- Tracer particles for LDA, PIV, etc.
- Coating of surfaces

Mehr Informationen:
https://www.palas.de/en/product/RBGsolo